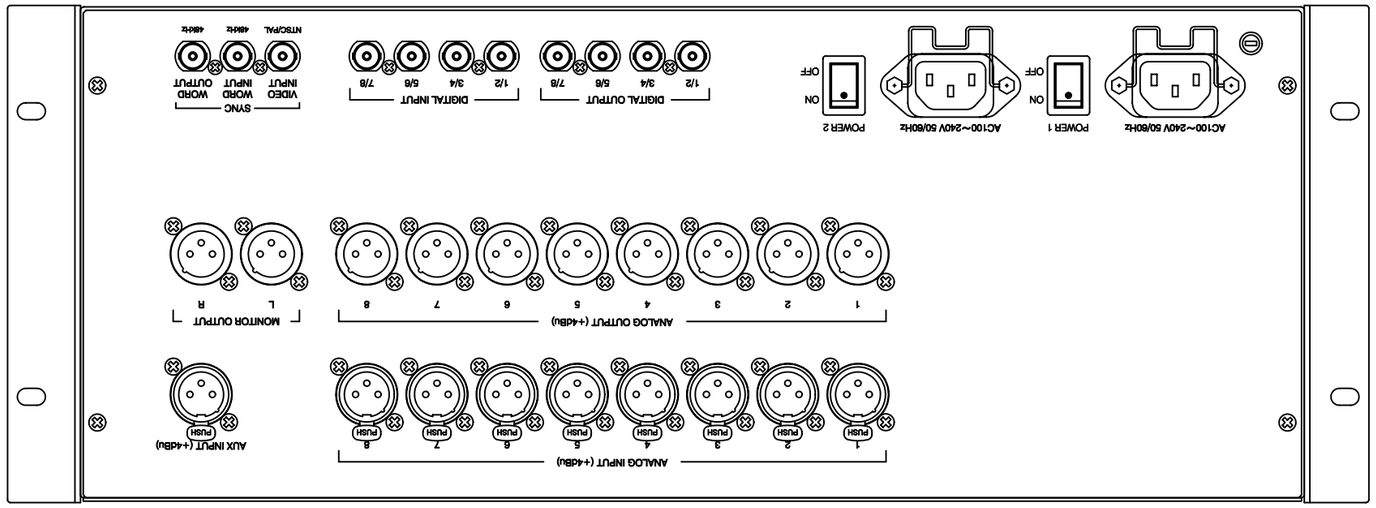
AC100~240V 50/60Hz
POWER 1
ON
OFF
AC100~240V 50/60Hz
POWER 2
ON
OFF
DIGITAL OUTPUT
1/2
3/4
5/6
7/8
DIGITAL INPUT
1/2
3/4
5/6
7/8
SYNC
VIDEO INPUT
WORD INPUT
WORD OUTPUT
NTSC/PAL
44kHz
48kHz
ANALOG OUTPUT (+4dBu)
1
2
3
4
5
6
7
8
MONITOR OUTPUT
L
R
ANALOG INPUT (+4dBu)
PUSH
AUX INPUT (+4dBu)
PUSH

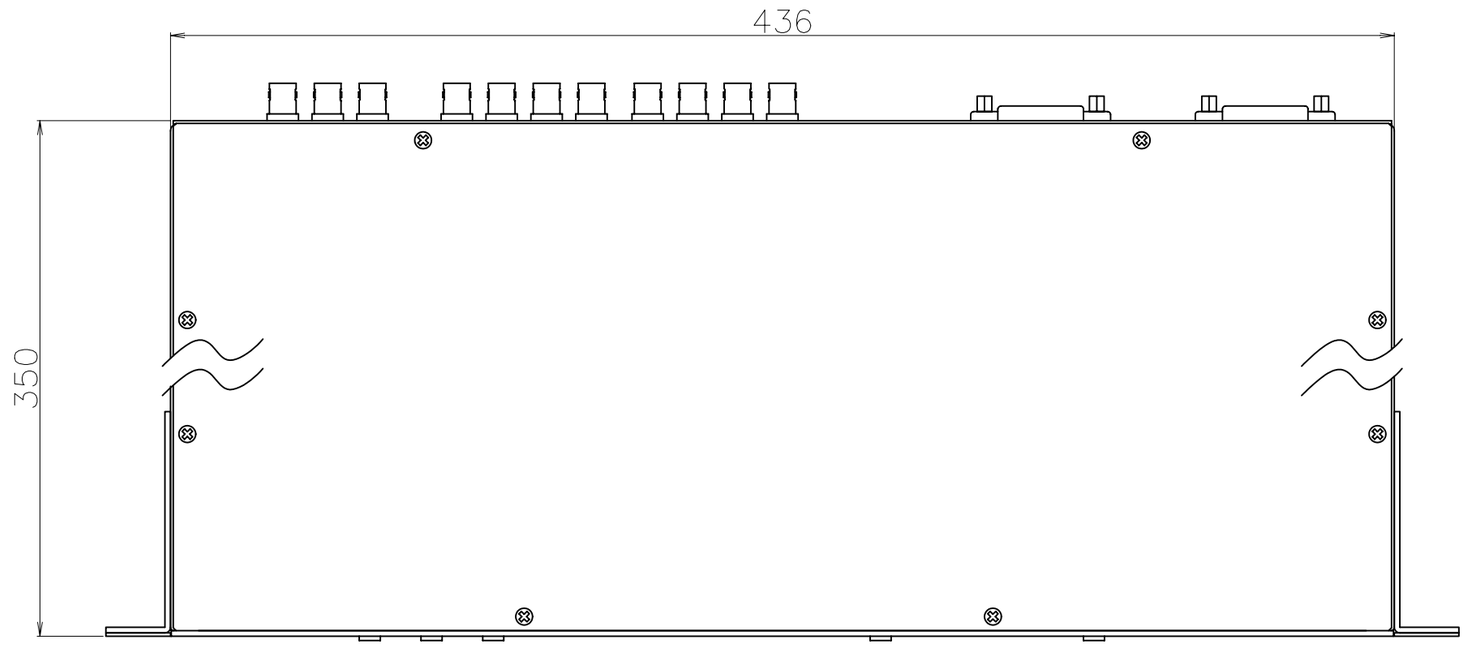
436
350

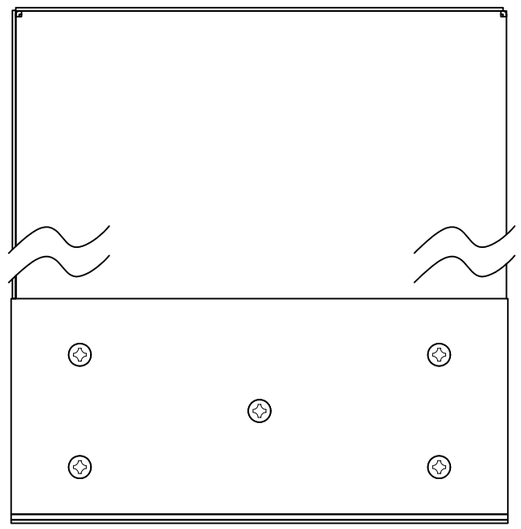

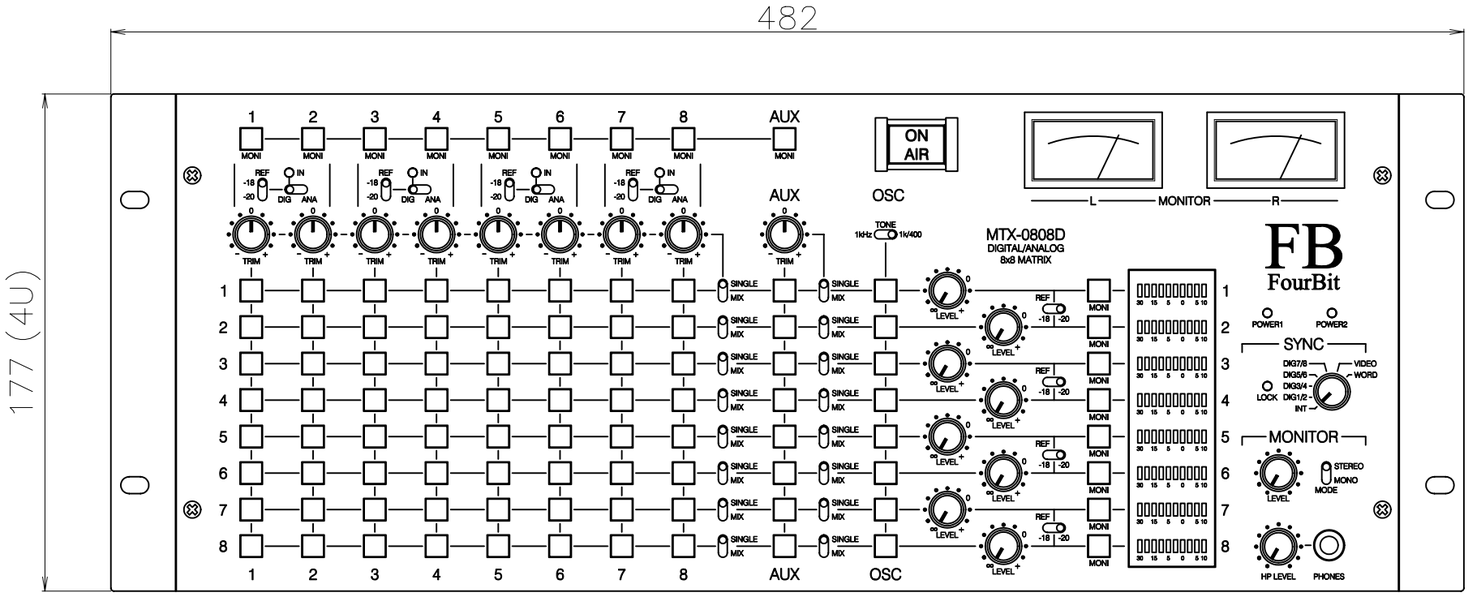
482
177 (4U)
1
2
3
4
5
6
7
8
AUX
MONI
REF
-18
-20
IN
DIG
ANA
TRIM
SINGLE
MIX
ON AIR
OSC
TONE
1kHz
1k/400
L
MONITOR
R
MTX-0808D
DIGITAL/ANALOG
8x8 MATRIX
LEVEL
FB
FourBit
POWER1
POWER2
SYNC
DIG7/8
DIG5/6
DIG3/4
DIG1/2
INT
VIDEO
WORD
LOCK
MONITOR
STEREO
MONO
MODE
HP LEVEL
PHONES